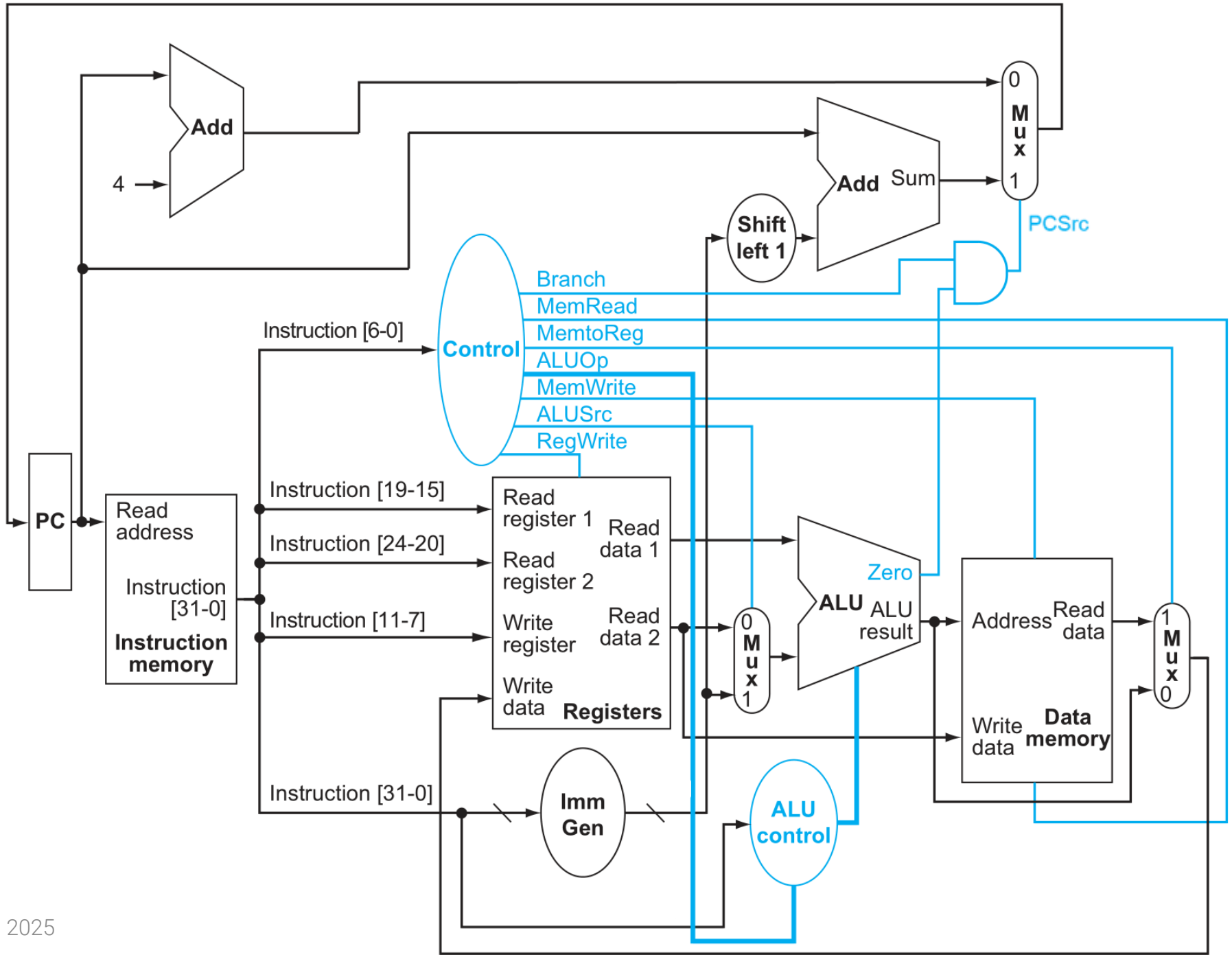
Add
4
Add
Sum
0
M
u
x
1
PCSrc
Shift
left 1
Branch
MemRead
MemtoReg
ALUOp
MemWrite
ALUSrc
RegWrite
Control
Instruction [6-0]
PC
Read
address
Instruction
[31-0]
Instruction
memory
Instruction [19-15]
Instruction [24-20]
Instruction [11-7]
Instruction [31-0]
Read
register 1
Read
register 2
Write
register
Write
data
Read
data 1
Read
data 2
Registers
0
M
u
x
1
ALU
Zero
ALU
result
Address
Read
data
Write
data
Data
memory
1
M
u
x
0
Imm
Gen
ALU
control